DRIVE TRAIN, PROP SHAFT, REAR - Z26S4D92AN/AH/BN/BH (C750264)

2026 RZR - RZR PRO S4 ULTIMATE (R01) - Z26S4D92AN/AH/BN/BH

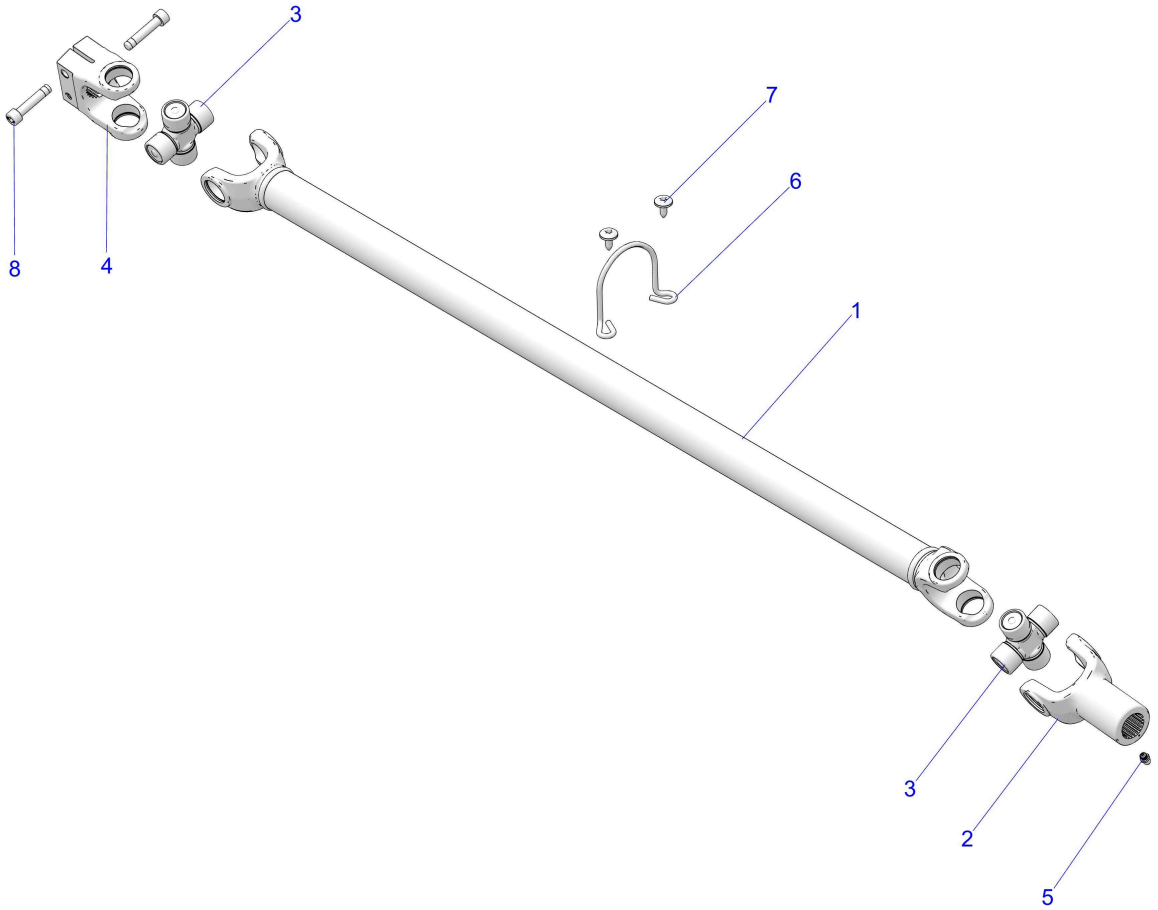

Reference #	*Part#*	*Description*	*Quantity*
1	1337153	ASM-PROPSHAFT,REAR,MP [INCL. 2-5]	1
2	3239321	YOKE, SLIP	1
3	2207308	U-JOINT	2
3	2207309	CIRCLIP	8
4	3239322	YOKE, PINCH	1
5	7080424	FITTING-LUBRICATION 1/4-28	1
6	5340737	HOOP-PROPSHAFT	1
7	7518936	SCR-M6X1X16 TR/TX-M	2
8	7521289	SCR-SH-M8X1.25X40 10.9 SFB	2

Copyright 1996-2026 Polaris Industries U.S.A All rights reserved.